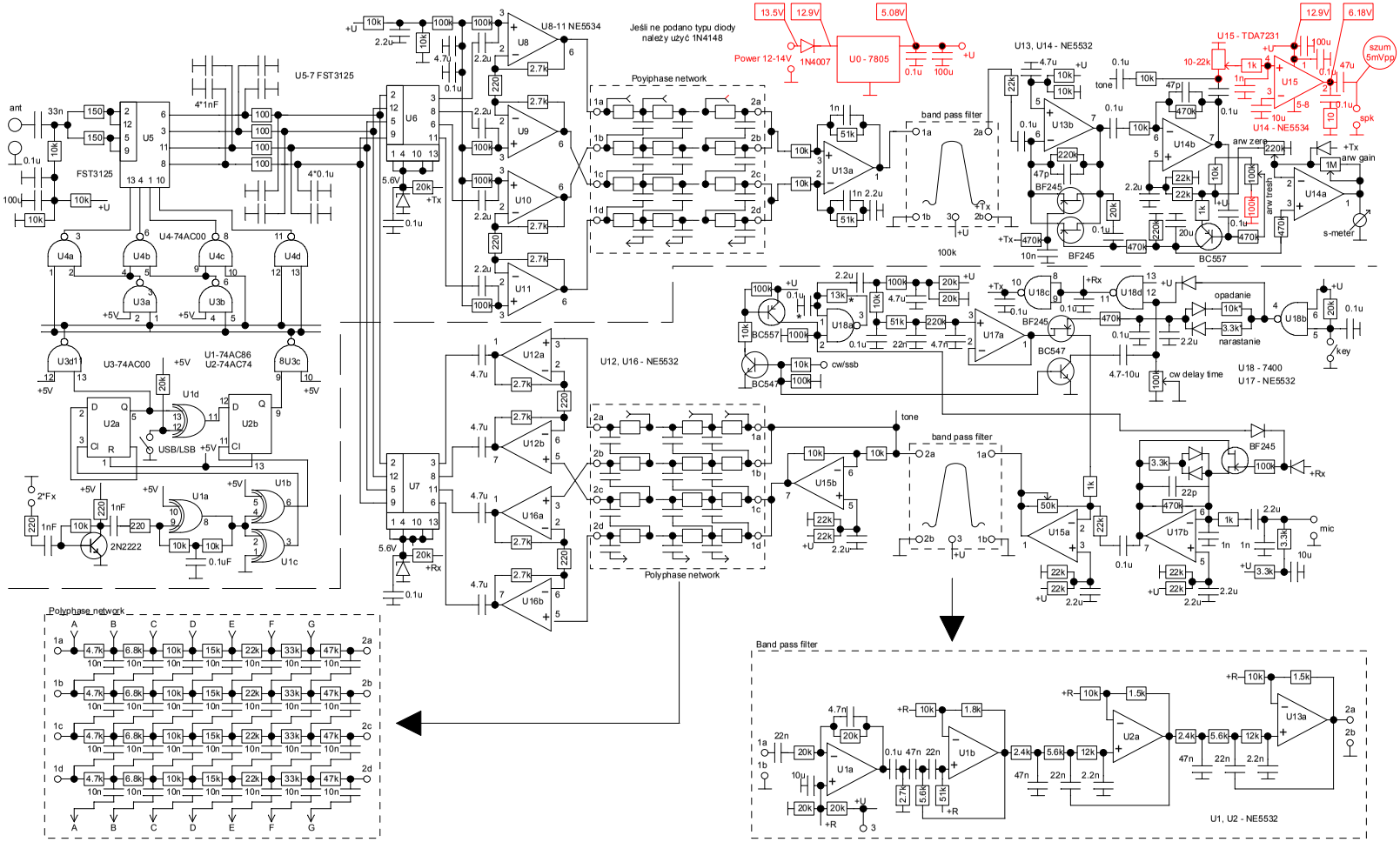
Jeśli ne podano typu diody należy użyć 1N4148
Power 12-14V
1N4007
U0 - 7805
13.5V
12.9V
5.08V
U13, U14 - NE5532
U15 - TDA7231
U14 - NE5534
12.9V
6.18V
szum 5mVpp
spk
U5-7 FST3125
FST3125
U4-74AC00
U3-74AC00
U1-74AC86
U2-74AC74
U8-11 NE5534
Poyiphase network
band pass filter
U12, U16 - NE5532
Polyphase network
U18 - 7400
U17 - NE5532
Band pass filter
U1, U2 - NE5532
ant
USB/LSB
cw/ssb
cw delay time
opadanie
narastanie
key
mic
s-meter
arw zero
arw gain
arw tresh
tone
2N2222
BF245
BC557
BC547